● Terminal Box Type

FHG/FHCG-02-30-∗-∗-13/1390
FHG/FHCG-03-125-∗-∗-13/1390

Mounting surface:
FH∗G-02: ISO 6263-AK-06-2-A
FH∗G-03: ISO 6263-AM-07-2-A

DIMENSIONS IN MILLIMETRES (INCHES)

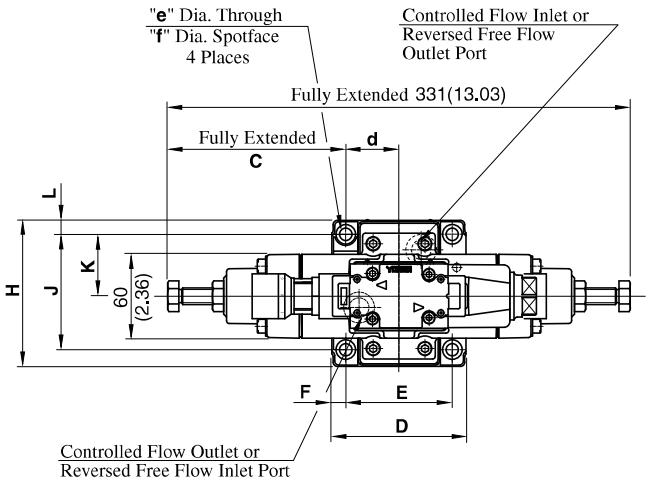

Model Numbers	n	t
FHG/FHCG-02-30-∗-∗-13	Rc 1/4	G 1/2
FHG/FHCG-02-30-∗-∗-1390	1/4 NPT	1/2 NPT
FHG/FHCG-03-125-∗-∗-13	Rc 1/4	G 1/2
FHG/FHCG-03-125-∗-∗-1390	1/4 NPT	1/2 NPT

Note: For dimensions of the valve mounting surface, see the installation drawing (P.281 and 282) of the sub-plate used together.

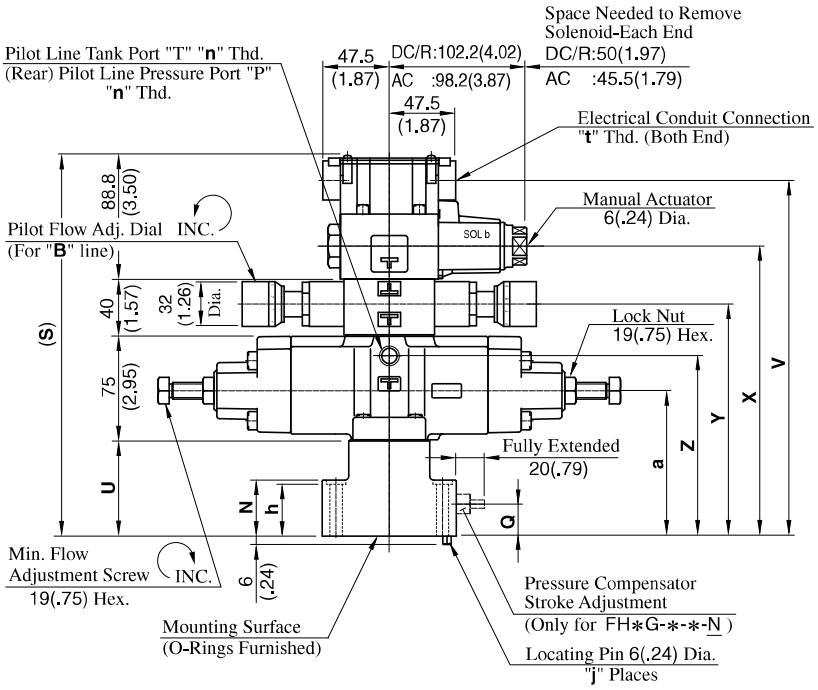

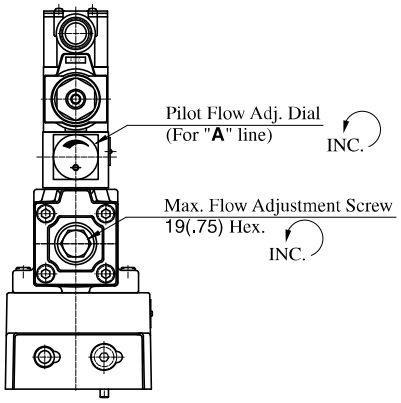

Model Numbers	Dimensions mm (Inches)															
	C	D	E	F	H	J	K	L	N	Q	S	U	V	X	Y	Z
FHG FHCG-02	127.4 (5.02)	96 (3.78)	76.2 (3.00)	9.9 (.39)	100.6 (3.96)	82.6 (3.25)	44.3 (1.74)	9 (.35)	40 (1.57)	23 (.91)	272.8 (10.74)	69 (2.72)	254.5 (10.02)	207.5 (8.17)	166 (6.54)	129 (5.08)
FHG FHCG-03	114.7 (4.52)	125 (4.92)	101.6 (4.00)	11.7 (.46)	125 (4.92)	101.6 (4.00)	61.8 (2.43)	11.7 (.46)	64 (2.52)	41 (1.61)	301.8 (11.88)	98 (3.86)	283.5 (11.16)	236.5 (9.31)	195 (7.68)	158 (6.22)

Model Numbers	Dimensions mm (Inches)					j
	a	d	e	f	h	
FHG FHCG-02	104 (4.09)	38.1 (1.50)	8.8 (.35)	14 (.55)	39 (1.54)	1
FHG FHCG-03	133 (5.24)	50.8 (2.00)	11 (.43)	17.5 (.69)	63 (2.48)	2

● **Models with Plug-in Connector**

FHG/FHCG-02-30-∗-∗-N-13/1380/1390
FHG/FHCG-03-125-∗-∗-N-13/1380/1390

DIMENSIONS IN MILLIMETRES (INCHES)

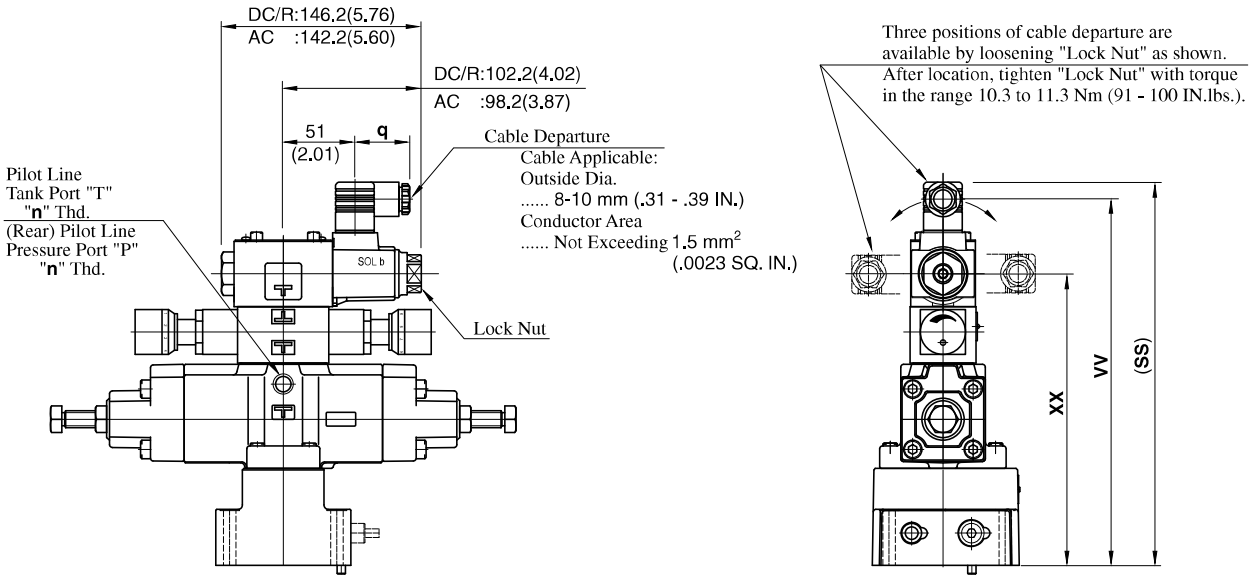

Model Numbers	Dimensions mm (Inches)				Remarks
	SS	VV	XX	q	
FHG/FHCG-02-30-∗-A∗-N	272.5 (10.73)	260.5 (10.26)	207.5 (8.17)	39 (1.54)	with AC Solenoid
FHG/FHCG-03-125-∗-A∗-N	301.5 (11.87)	289.5 (11.40)	236.5 (9.31)		
FHG/FHCG-02-30-∗-D∗-N	283.5 (11.16)	271.5 (10.69)	207.5 (8.17)	39 (1.54)	with DC Solenoid
FHG/FHCG-03-125-∗-D∗-N	312.5 (12.30)	300.5 (11.83)	236.5 (9.31)		
FHG/FHCG-02-30-∗-R∗-N	286.5 (11.28)	264.7 (10.42)	207.5 (8.17)	53 (2.09)	with AC→DC Solenoid
FHG/FHCG-03-125-∗-R∗-N	315.5 (12.42)	293.7 (11.56)	236.5 (9.31)		

Model Numbers	Thread Size		
	Japanese Std. "JIS" Design 13	European Design Std. Design 1380	N.American Design Std. Design 1390
	"n" Thd.	"n" Thd.	"n" Thd.
FHG/FHCG-02-30-∗-∗-N	Rc 1/4	1/4 BSP.F	1/4 NPT
FHG/FHCG-03-125-∗-∗-N			

• For other dimensions, refer to "Terminal Box Type".

Mounting surface:
FH∗G-06: ISO 6263-AP-08-2-A

● Terminal Box Type

FHG/FHCG-06-250-∗-∗-13/1390
FHG/FHCG-10-500-∗-∗-13/1390

DIMENSIONS IN MILLIMETRES (INCHES)

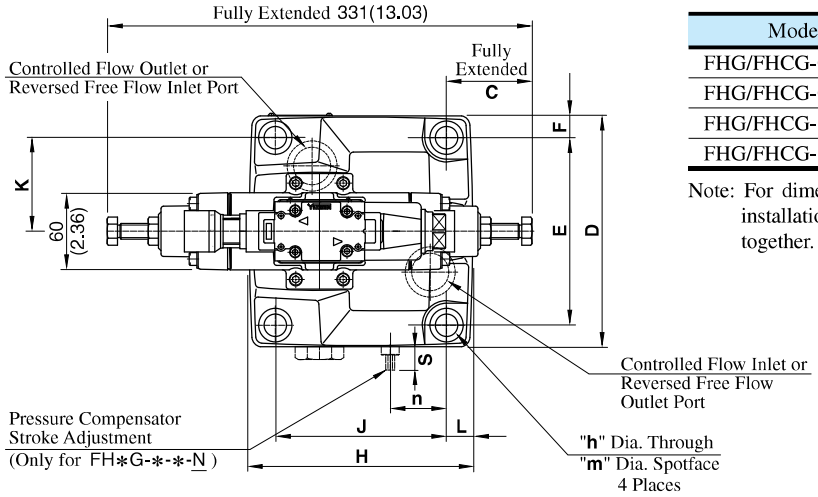

Model Numbers	q	r
FHG/FHCG-06-250-∗-∗-13	Rc 1/4	G 1/2
FHG/FHCG-06-250-∗-∗-1390	1/4 NPT	1/2 NPT
FHG/FHCG-10-500-∗-∗-13	Rc 1/4	G 1/2
FHG/FHCG-10-500-∗-∗-1390	1/4 NPT	1/2 NPT

Note: For dimensions of the valve mounting surface, see the installation drawing (P.282 and 283) of the sub-plate used together.

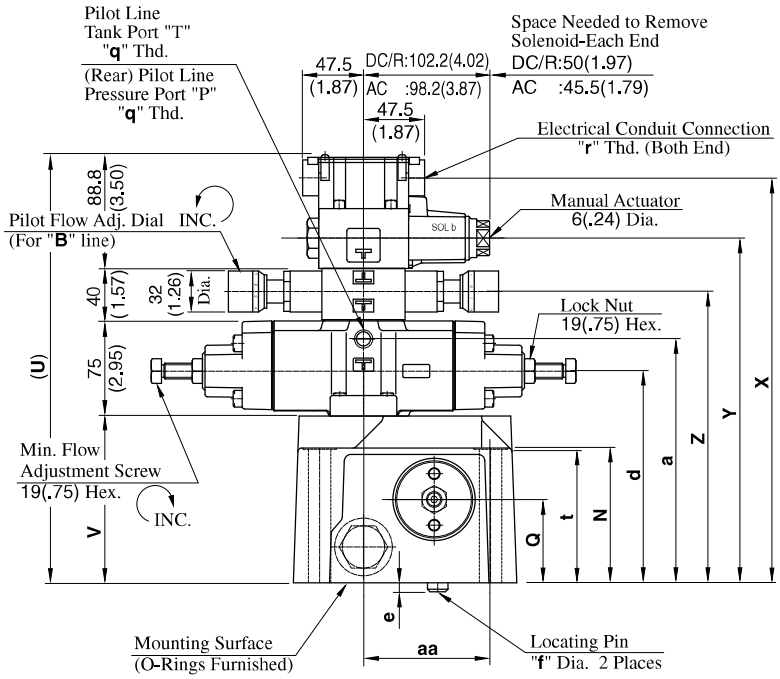

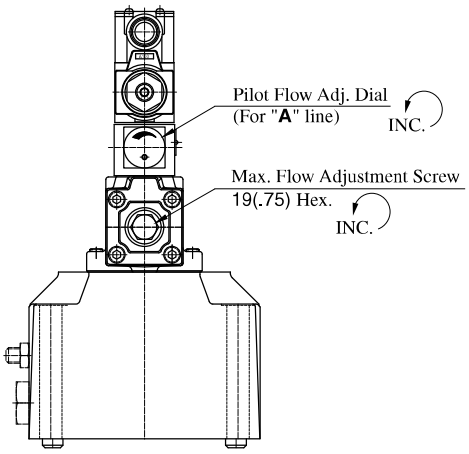

Model Numbers	Dimensions mm (Inches)															
	C	D	E	F	H	J	K	L	N	Q	S	U	V	X	Y	Z
FHG FHCG-06	66.5 (2.62)	180 (7.09)	146.1 (5.75)	17 (.67)	174 (6.85)	133.4 (5.25)	73.1 (2.88)	20.3 (.80)	105 (4.13)	65 (2.56)	18 (.71)	333.8 (13.14)	130 (5.12)	315.5 (12.42)	268.5 (10.57)	227 (8.94)
FHG FHCG-10	21 (.83)	244 (9.61)	196.9 (7.75)	23.5 (.93)	228 (8.98)	177.8 (7.00)	98.5 (3.88)	25.1 (.99)	137 (5.39)	85 (3.35)	23 (.91)	363.8 (14.32)	160 (6.30)	345.5 (13.60)	298.5 (11.75)	257 (10.12)

Model Numbers	Dimensions mm (Inches)								
	a	d	e	f	h	m	n	t	aa
FHG FHCG-06	190 (7.48)	165 (6.50)	7 (.28)	16 (.63)	17.5 (.69)	26 (1.02)	44 (1.73)	103 (4.06)	99 (3.90)
FHG FHCG-10	220 (8.66)	195 (7.68)	10 (.39)	18 (.71)	21.5 (.85)	32 (1.26)	61 (2.40)	135 (5.31)	144.5 (5.69)

● **Models with Plug-in Connector**

FHG/FHCG-06-250-∗-∗-N-13/1380/1390
FHG/FHCG-10-500-∗-∗-N-13/1380/1390

DIMENSIONS IN MILLIMETRES (INCHES)

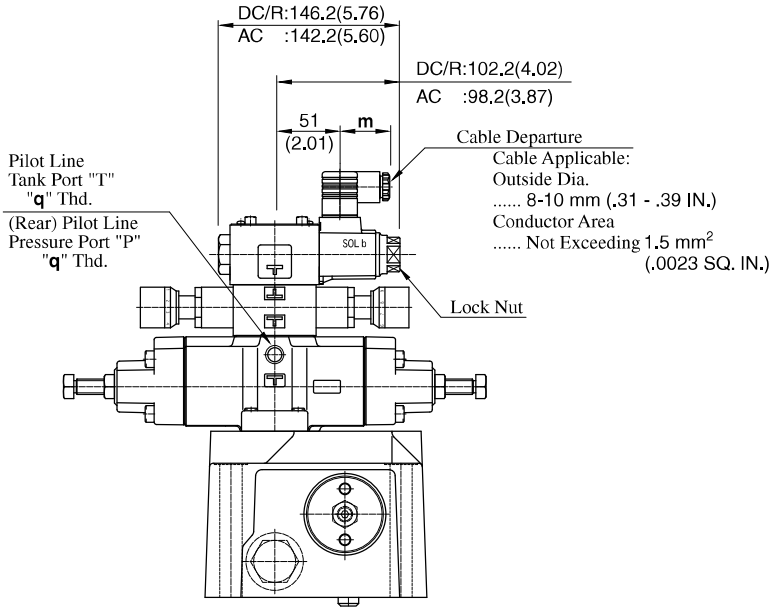

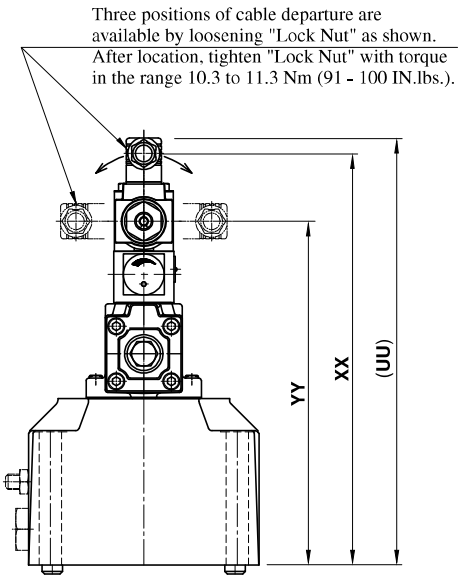

Model Numbers	Dimensions mm (Inches)				Remarks
	UU	XX	YY	m	
FHG/FHCG-06-250-∗-A∗-N	333.5 (13.13)	321.5 (12.66)	268.5 (10.57)	39 (1.54)	with AC Solenoid
FHG/FHCG-10-500-∗-A∗-N	363.5 (14.31)	351.5 (13.84)	298.5 (11.75)		
FHG/FHCG-06-250-∗-D∗-N	344.5 (13.56)	332.5 (13.09)	268.5 (10.57)	39 (1.54)	with DC Solenoid
FHG/FHCG-10-500-∗-D∗-N	374.5 (14.74)	362.5 (14.27)	298.5 (11.75)		
FHG/FHCG-06-250-∗-R∗-N	347.5 (13.68)	325.7 (12.82)	268.5 (10.57)	53 (2.09)	with AC→DC Solenoid
FHG/FHCG-10-500-∗-R∗-N	377.5 (14.86)	355.7 (14.00)	298.5 (11.75)		

Model Numbers	Thread Size		
	Japanese Std. "JIS" Design 13	European Design Std. Design 1380	N.American Design Std. Design 1390
	"q" Thd.	"q" Thd.	"q" Thd.
FHG/FHCG-06-250-∗-∗-N	Rc 1/4	1/4 BSP.F	1/4 NPT
FHG/FHCG-10-500-∗-∗-N			

● For other dimensions, refer to "Terminal Box Type".